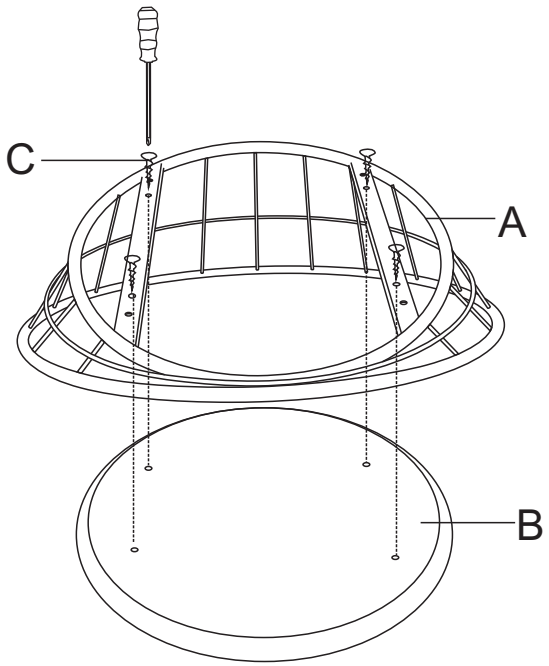


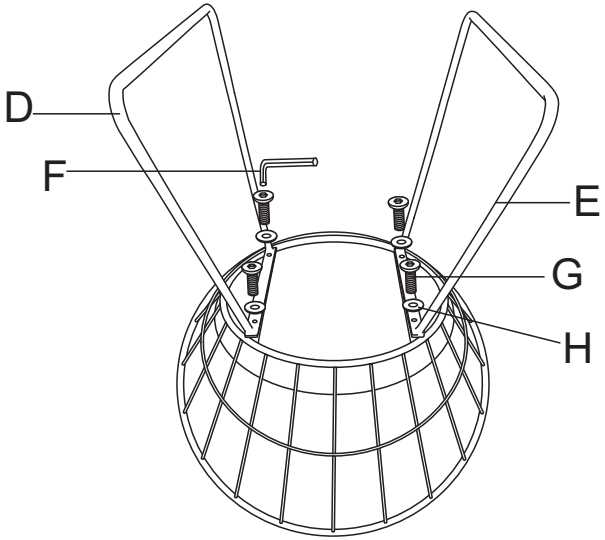


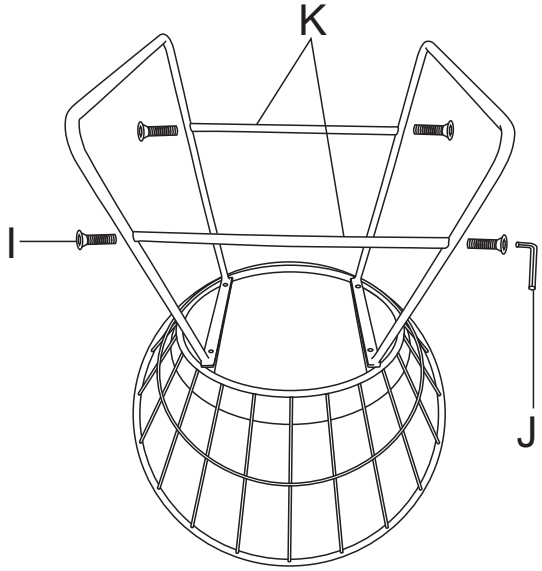


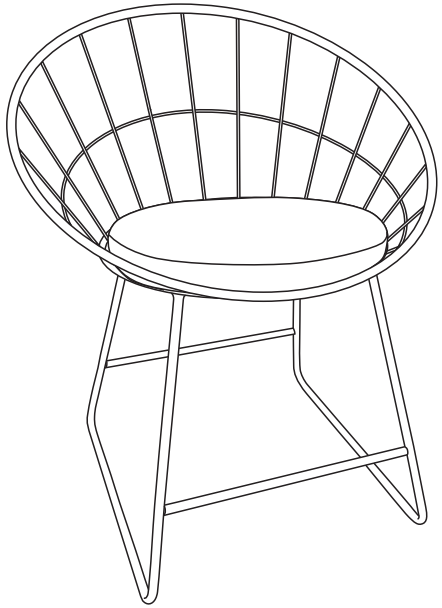

| | | | | | |
|---|---|---|---|---|---|
| A | | x1 | G | | x4 |
| B | | x1 | H | | x4 |
| C | | x4 | I | | x4 |
| D | | x1 | J | | x1 |
| E | | x1 | K | | x2 |
| F | | x1 | | | |